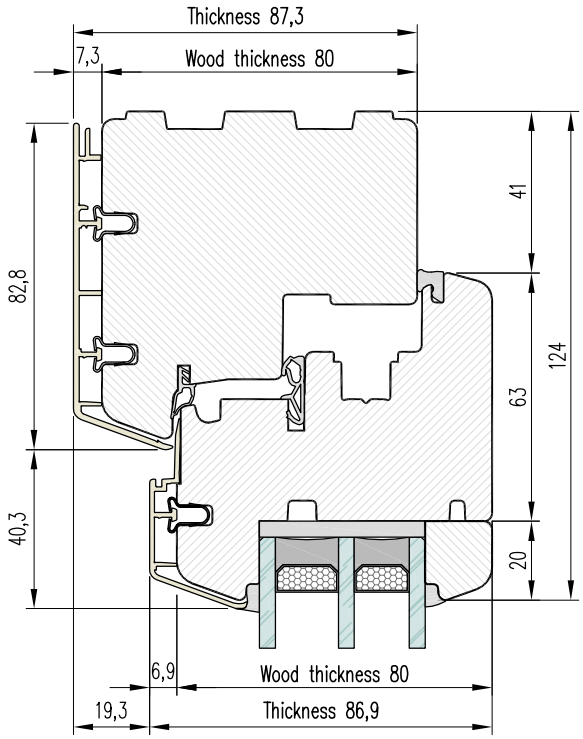

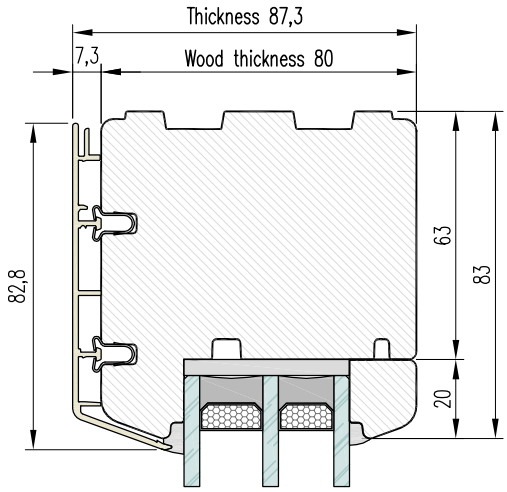

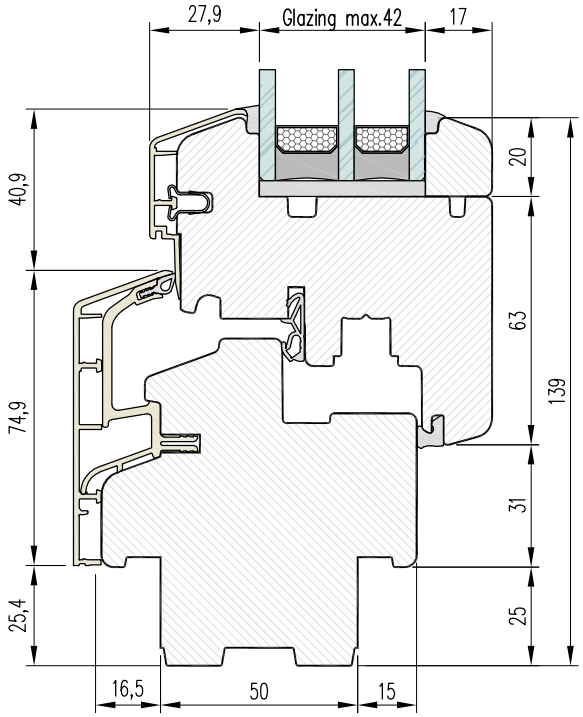

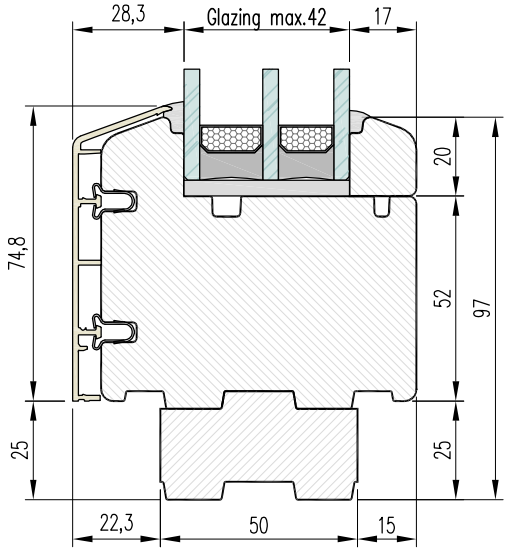

				Bayerwald HA.87	Page	Pages	
					1	1	

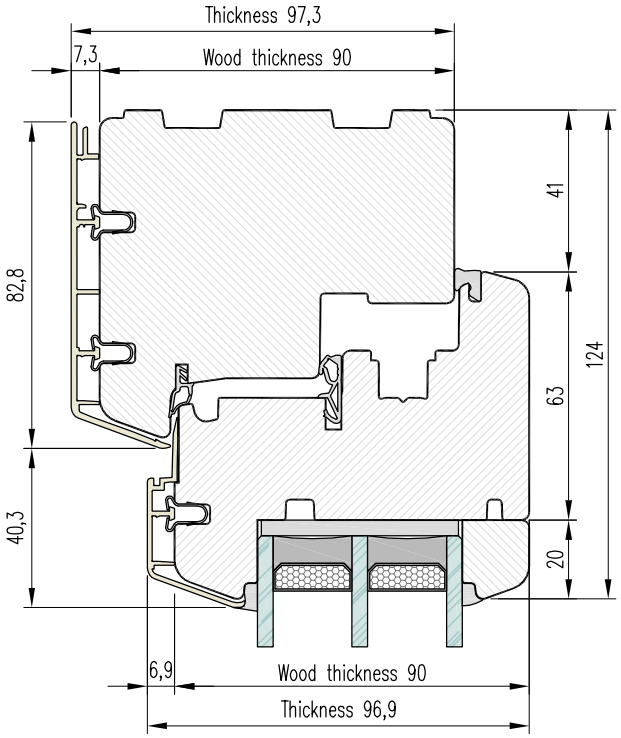

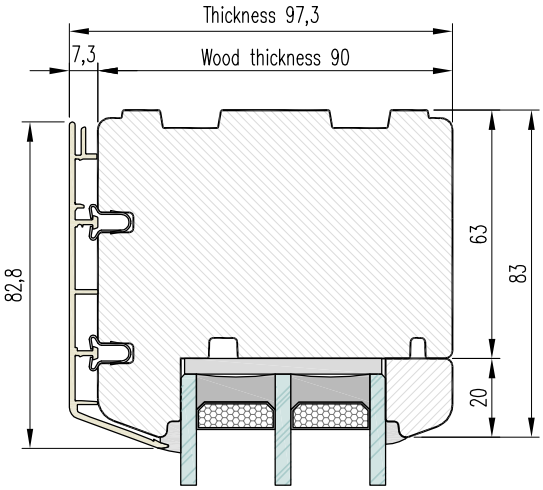

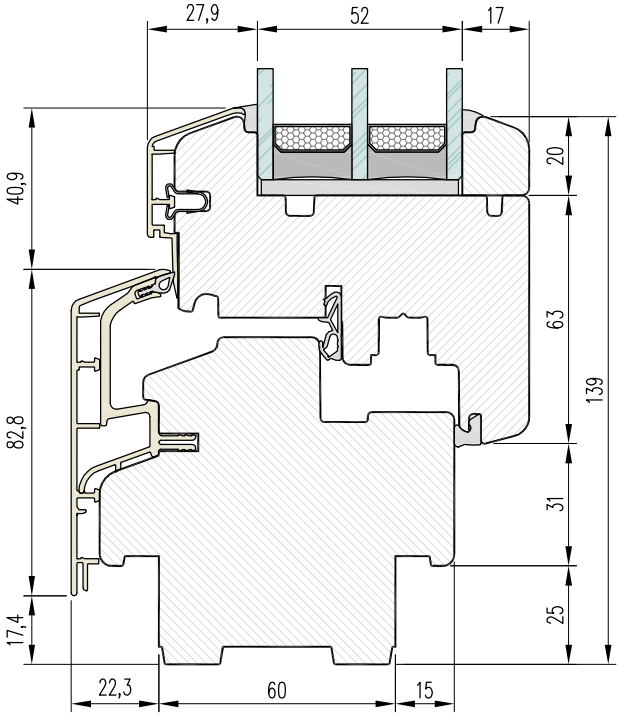

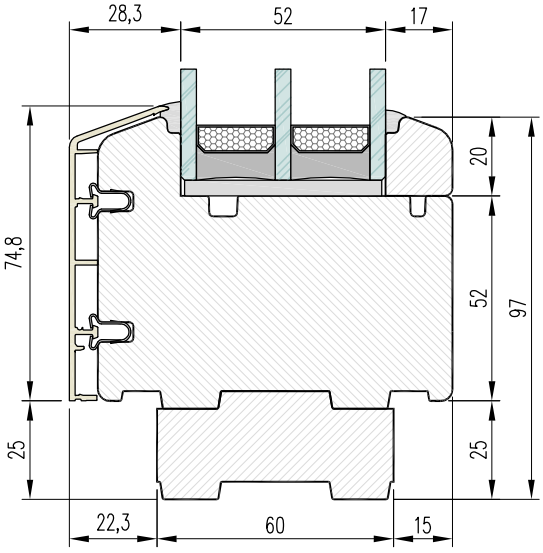

				Bayerwald HA.97	Page	Pages	
					1	1	