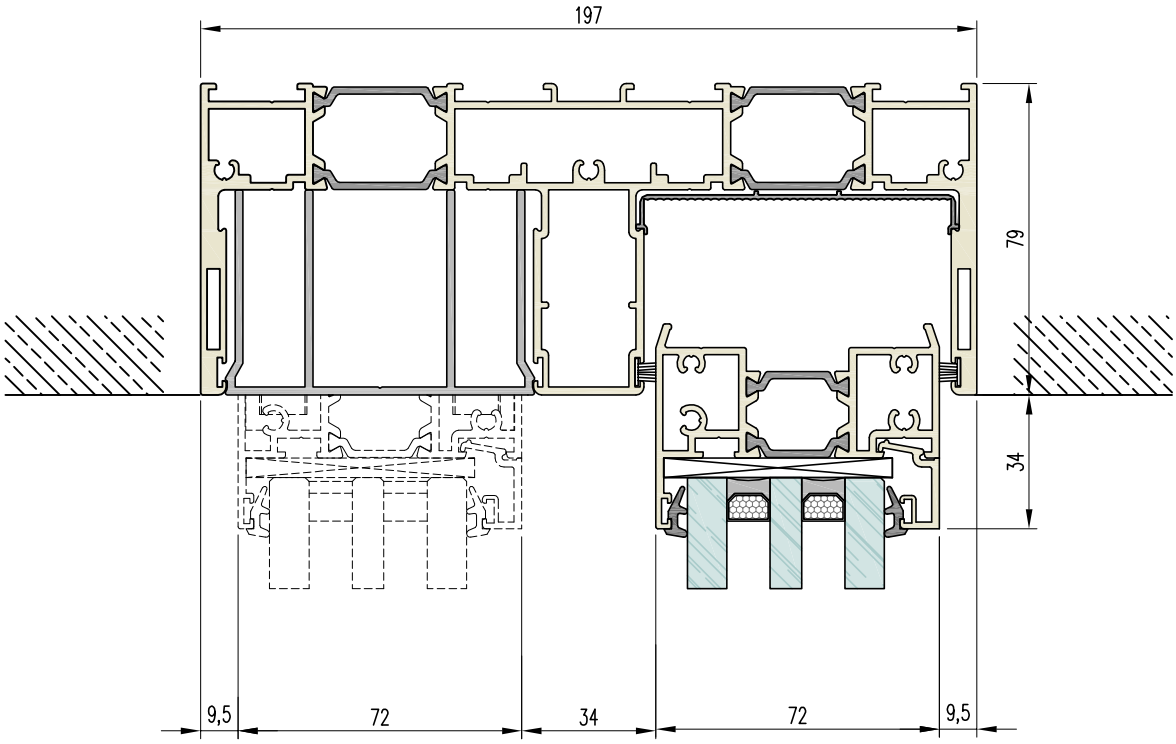

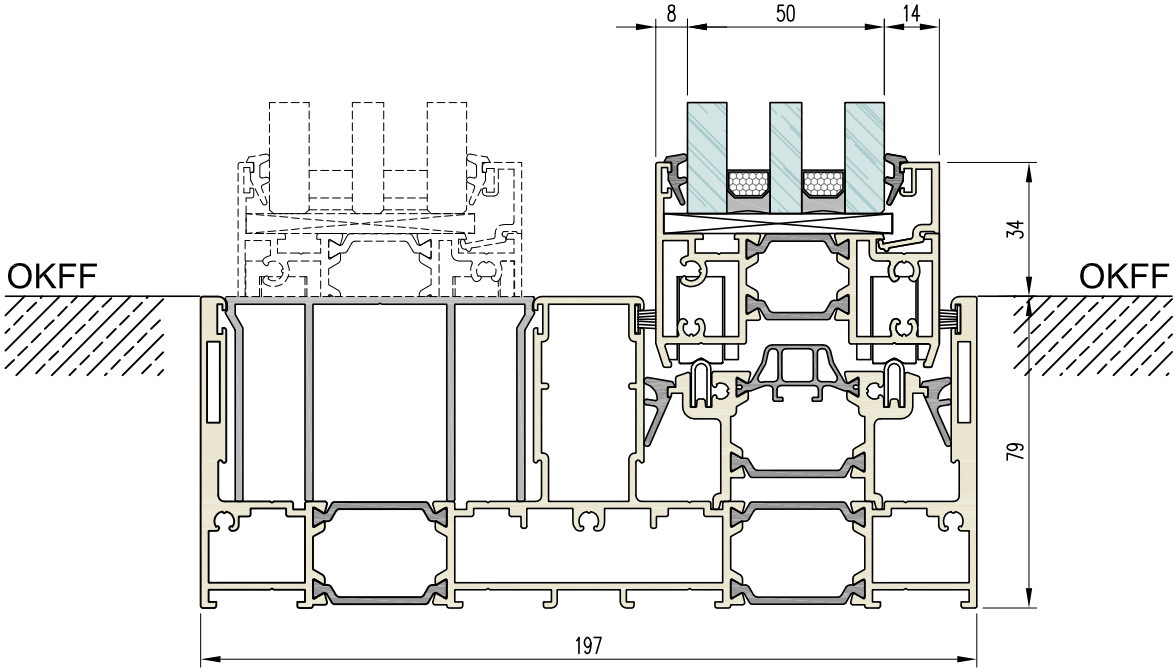

				Solarlux CERO	Page	Pages	
					1	2	

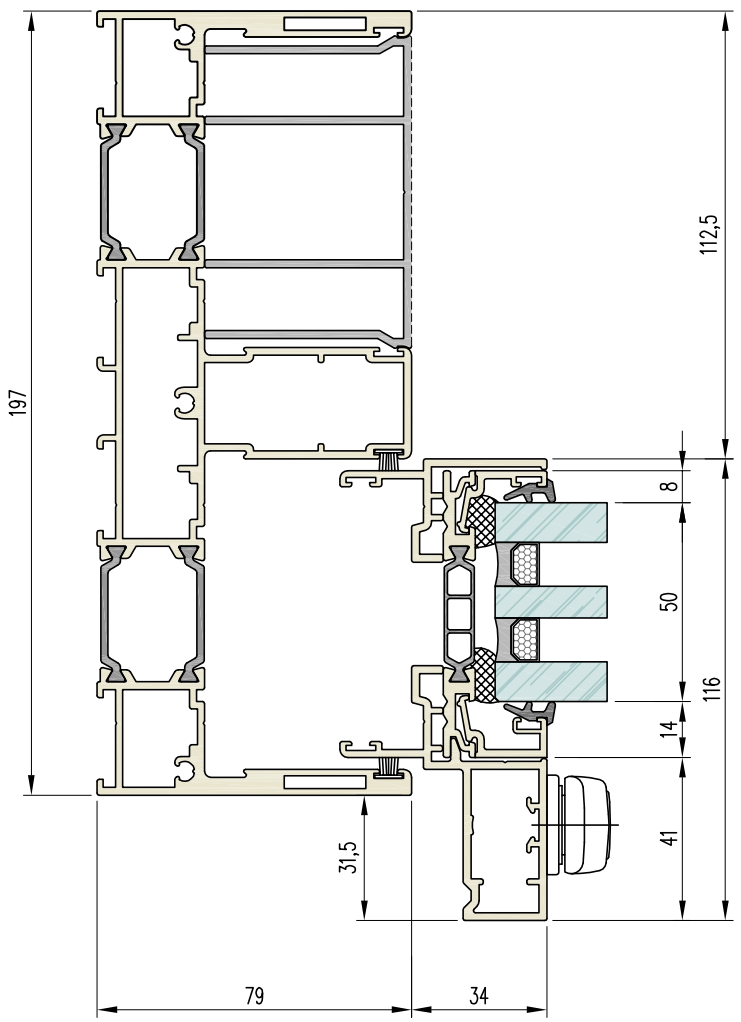

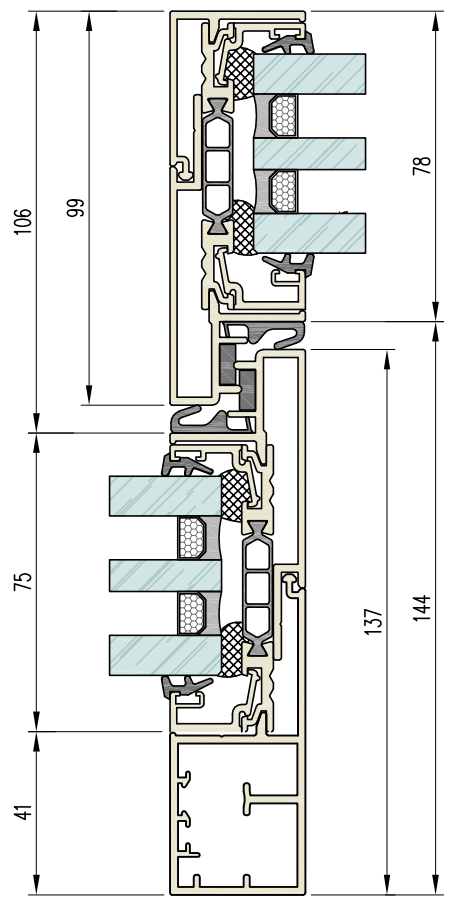

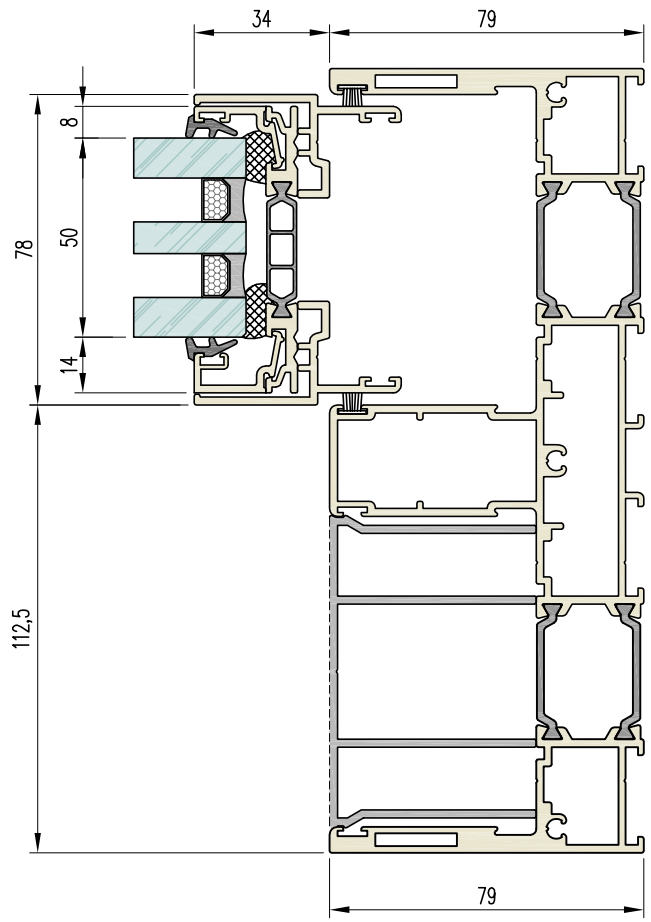

				Solarlux CERO	Page	Pages	
					2	2	